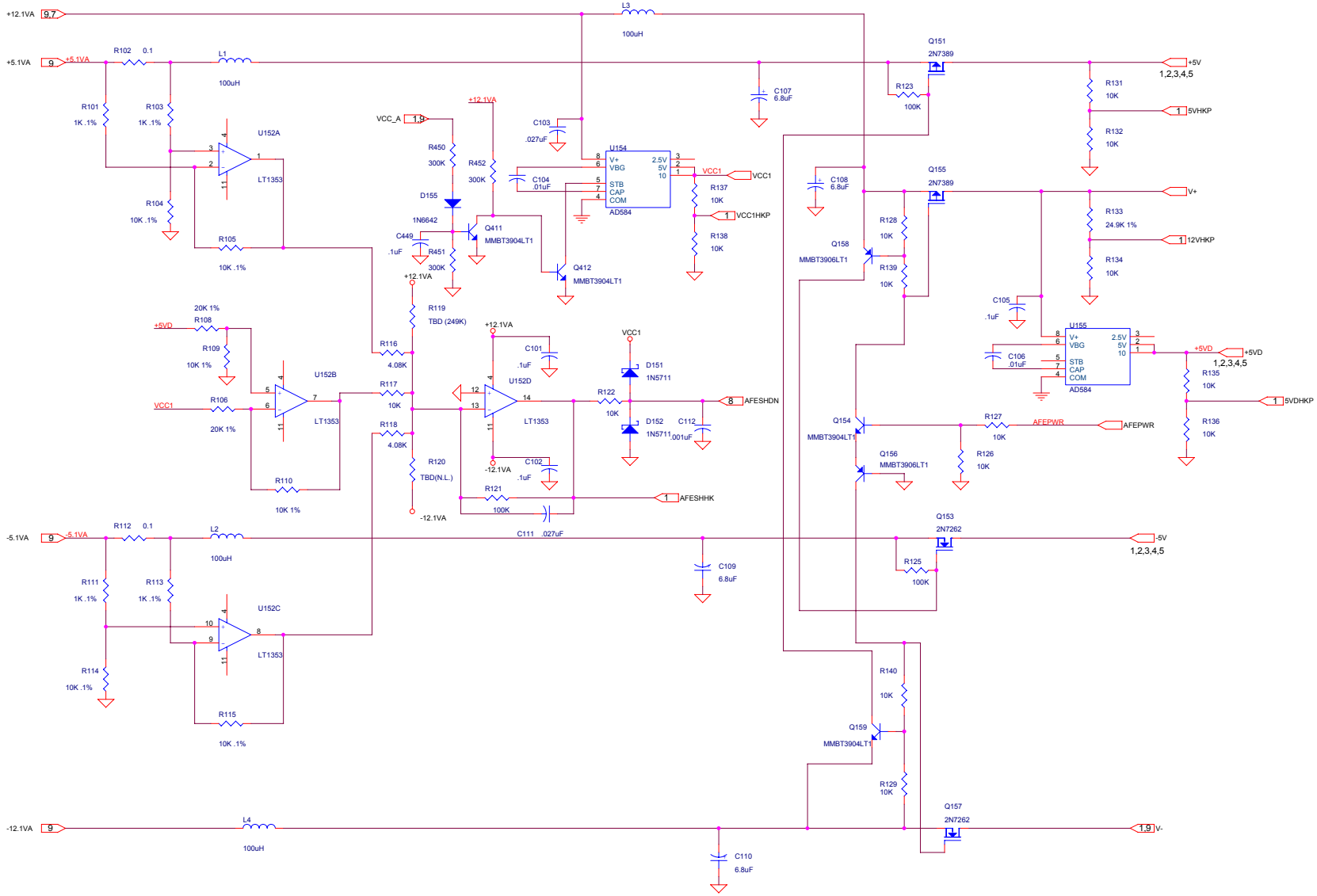

Title	SWEA/STE POWER INTERFACE
Size C	Document Number {Doc}
Rev B	
Date: Friday, January 16, 2004	Sheet 6 of 10